LONG SEAMS	
COURSE	ORIENTATION
1(TOP)	240°
2	250°

*VERT – TOP TO BOTTOM

Ship loose items:
(1 PC) AGITATOR SUPPORT PLATE
(2 PC) BLUNGER COVER PLATE
(1 PC) ITEM 3
(1 PC) ITEM 9
AGITATOR SUPPORT ASSEMBLY

NOTE 8: X-RAY: SPOT X-RAY IS REQUIRED PER CODE FOR NOZZLE A1 @ CIRC. SEAM

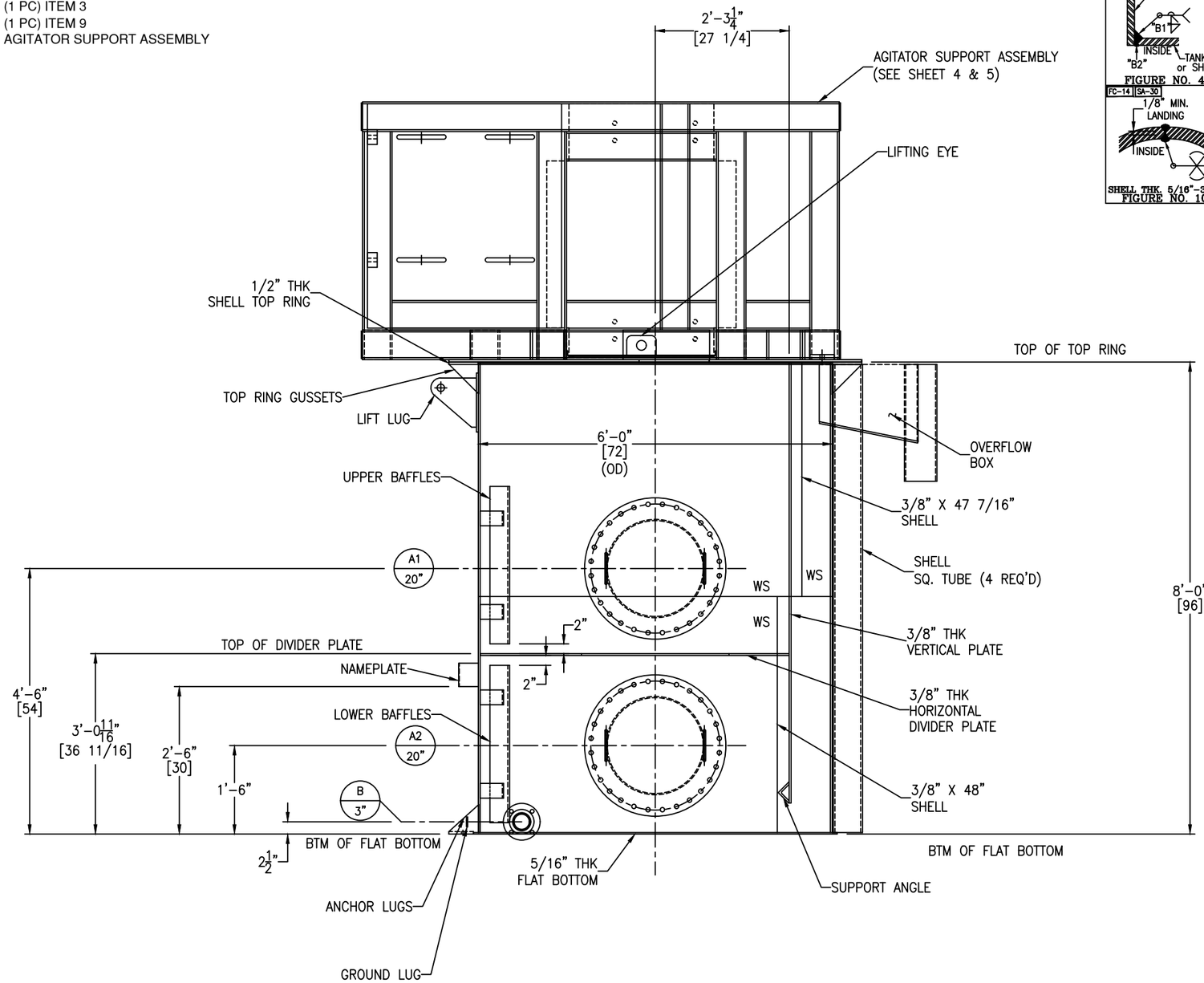

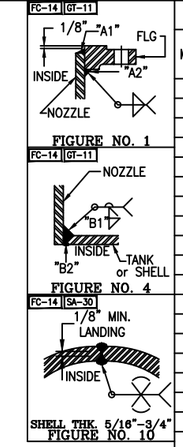

NOZZLE SCHEDULE

MARK	SERVICE	SIZE	RATING	TYPE / STYLE	NECK SCHED.	PROJECTION EXT. (℄)	PROJECTION INT. (MIN.)	WELD FIGURE	REPAD SIZE (WIDTH X THK.)	WELD SIZE "A1"	"A2"	"B1"	"B2"	"C1"	"C2"
A1	MANWAY	20"	–	API W/HANDLES	1/4"	8"	–	4	–	–	–	1/4	1/8	–	–
A2	MANWAY	20"	–	API W/HANDLES	1/4"	8"	–	4	–	–	–	1/4	1/8	–	–
B	DRAIN	3"	150#	RFSO	40S	SEE DWG	–	1,4	–	1/4	1/4	1/4	1/8	–	–

MATERIALS OF CONSTRUCTION

	VESSEL
SHELL	SA240-316/316L
FLAT BOTTOM	SA240-316/316L
RIM ANGLE	–
NOZZLE NECKS	SA312-316/316L WLD
NOZZLE FLANGES	SA182F-316/316L
MANWAY NECKS	SA240-316/316L
MANWAY FLANGES	SA240-316/316L
GASKETS	GARLOCK 3000
BOLTS/STUDS	SA193-B7 (ZINC PLATED)
NUTS	SA194-2H (ZINC PLATED)
REPADS	SA240-304/304L
DIVIDER PLATES	SA240-316/316L
SUPPORTS/HOLD DOWNS	SA240-304/304L
LIFTING LUGS	SA240-304/304L
SHELL TOP RING	SA240-304/304L
DIVIDER PLATE	SA240-316/316L
GROUND LUG	SA240-304/304L
BAFFLE	SA240-316/316L
AGITATOR BRIDGE	SA36
AGITATOR MOUNTING PLATE	SA36
SHELL SQUARE TUBES	SA36
BLUNGER COVER	SA36
OVERFLOW BOX	SA240-316/316L & SA312-316/316L WLD
PLATFORM CLIPS	–
DIPTUBE SUPPORT	–
JACKET SHELL	–
JACKET HEADS	–
JACKET NOZZLE NECKS	–
JACKET NOZZLE FLANGES	–

DESIGN DATA

	VESSEL
DESIGN AND FAB. CODE	API650
CERT. STAMP REQ'D.	NO
DESIGN PRESSURE	ATM
DESIGN TEMPERATURE	120° F
MIN. DESIGN METAL TEMP.	-20° F @ ATM
OPERATING PRESSURE	–
OPERATING TEMPERATURE	–
JOINT EFFICIENCY HEADS	0.70
JOINT EFFICIENCY SHELL	0.70
CORROSION ALLOWANCE	0"
SPECIFIC GRAVITY	1.0
EARTHQUAKE ZONE	Ss = (0.3) S1 = (0.094)
WIND LOAD	109 MPH
STRESS RELIEF	NOT REQ'D
RADIOGRAPHIC EXAM	SEE NOTE 8
DYE PENETRANT EXAM	NOT REQ'D
MAGNETIC PARTICLE EXAM	NOT REQ'D
HYDROSTATIC TEST	FULL OF WATER
PNEUMATIC TEST	NOT REQ'D
JKT DESIGN AND FAB. CODE	–
JKT CERT. STAMP REQ'D.	–
JKT DESIGN PRESSURE	–
JKT DESIGN TEMPERATURE	–
JKT MIN. DESIGN METAL TEMP.	–
JKT OPERATING PRESSURE	–
JKT OPERATING TEMPERATURE	–
JKT JOINT EFFICIENCY HEADS	–
JKT JOINT EFFICIENCY SHELL	–
JKT HYDRO TEST	–

VESSEL FINISH

INTERIOR WELD TREATMENT:	SAV TANK STANDARD
EXTERIOR WELD TREATMENT:	SAV TANK STANDARD
SAV TANK FINISHING STANDARD:	SEE NOTE 6
INSULATION:	N/A
PAINTING:	SEE NOTE 7

VESSEL CAPACITY AND WEIGHTS

OPERATING CAPACITY	–
FULL CAPACITY	1,650 GAL.
EMPTY SHIPPING WEIGHT W/O AGITATOR BRIDGE	6,300 LBS.
WEIGHT FULL OF WATER	24,200 LBS.
WEIGHT FULL OF PRODUCT	24,200 LBS.
WEIGHT OF AGITATOR BRIDGE	5,050 LBS.

QUALITY CONTROL

ENG. _____ DATE: _____

Q.C. _____ DATE: _____

This drawing is issued for customer approval. please review, make approval changes (if any) in red. check the appropriate box, sign & date.

- ☐ Approval – no changes. Please proceed with fabrication.
- ☐ Approved as noted. Please proceed with fabrication
- ☐ Not approved. Please make changes and resubmit.

Customer signature _____ Date _____

GENERAL NOTES

1.) COVER ALL FLANGES, OPENINGS & MACHINED SURFACES PRIOR TO SHIPMENT UNLESS OTHERWISE NOTED.
2.) BOLT HOLES TO STRADDLE 0° & 180° UNLESS OTHERWISE NOTED.
3.) NOZZLE REPADS TO HAVE (1) ø1/4" TELL-TALE HOLES ON HORIZONTAL CENTER LINE.
ALL OTHER REPADS TO HAVE (1) ø1/4" WEEP HOLE AT LOWEST POINT ON PAD.
4.) MANUFACTURING TOLERANCE TO BE IN ACCORDANCE WITH API STANDARD 650 7.5.
5.) ASME MATERIALS TO CONFORM TO THE FOLLOWING: FLANGES – B16.5, FITTINGS – B16.9 & COUPLINGS – B16.11.
6.) PICKLE ALL EXTERIOR WELDS. PASSIVATE INTERIOR & EXTERIOR OF VESSEL.
7.) PAINTING (AGITATOR BRIDGE AND SHELL SQ. TUBES)– SANDBLAST SP6. (1) COAT MACROPOXY 646 GRAY (5–7 MILS) PAINT.
8.) X-RAY: SPOT X-RAY IS REQUIRED PER CODE FOR NOZZLE A1 @ CIRC. SEAM

REVISIONS

REV	D.BY	C.BY	DATE	DESCRIPTION
				AS BUILT
6	RS	NP	4/21/25	CERTIFIED
5	RS	NP	4/14/25	APPROVAL REV 5
4	RS	NP	4/4/25	APPROVAL REV 4
3	AD	RS	3/18/25	APPROVAL REV 3
2	AD	RS	3/7/25	APPROVAL REV 2
1	AD	RS	2/11/25	APPROVAL REV 1
0	AD	RS	1/24/25	APPROVAL

Savannah Tank & Equipment Corp.
1517 Telfair Road, Savannah, GA 31415
(912) 233-8902

DRAWN BY: AD
CHK'D BY: RS
APPROVED BY: NP
SCALE: 3/4" = 1'-0"

THIELE KAOLIN
BLUNGER TANK #3
EQUIP. #
CUST. PO #247729

DRAWING NO.: 003-25-1 SHT 1 OF 10 REV. SET 6

LONG SEAMS

COURSE	ORIENTATION
1(TOP)	240°
2	250°

*VERT – TOP TO BOTTOM

AGITATOR BRIDGE NOT SHOWN FOR CLARITY PURPOSE
SEE SHEET 4 AND 5 FOR AGITATOR BRIDGE DETAILS

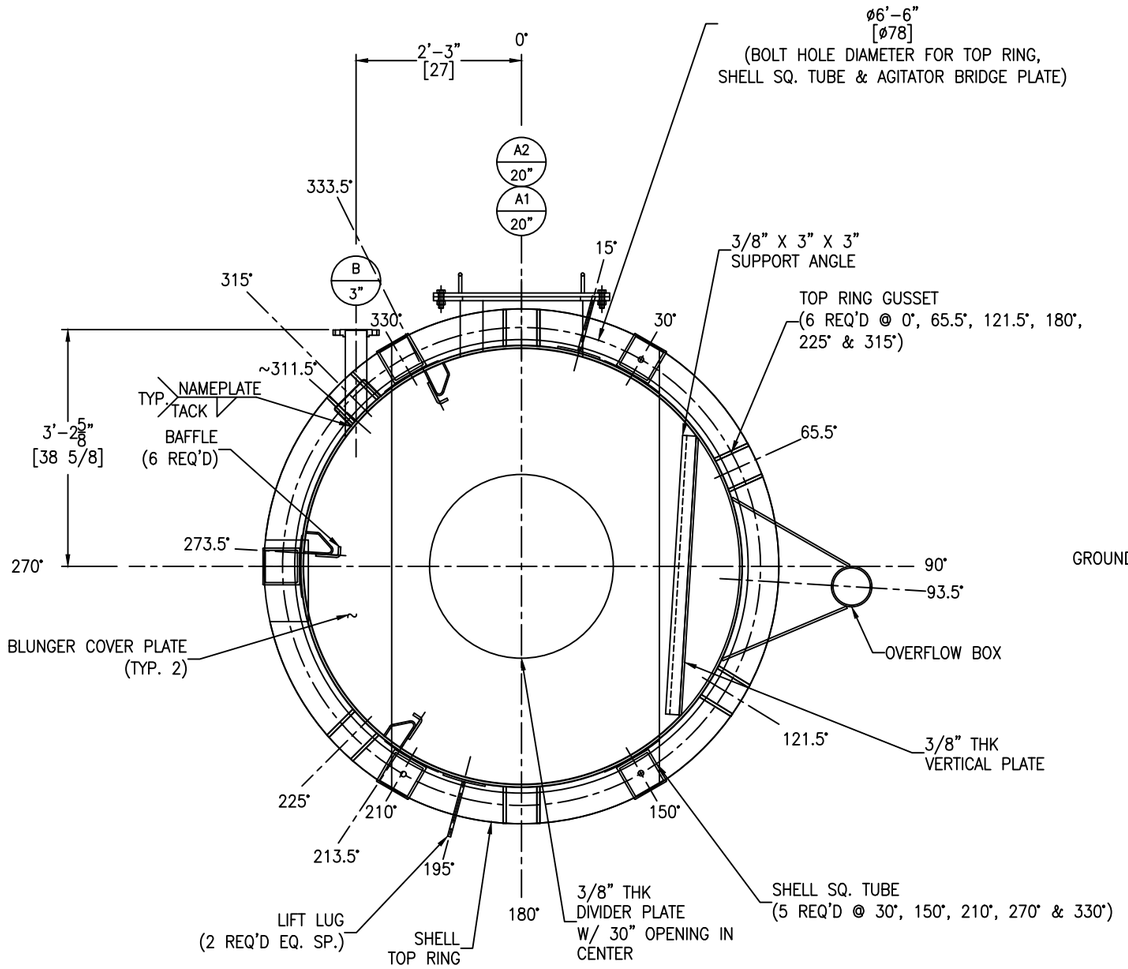

PLAN VIEW

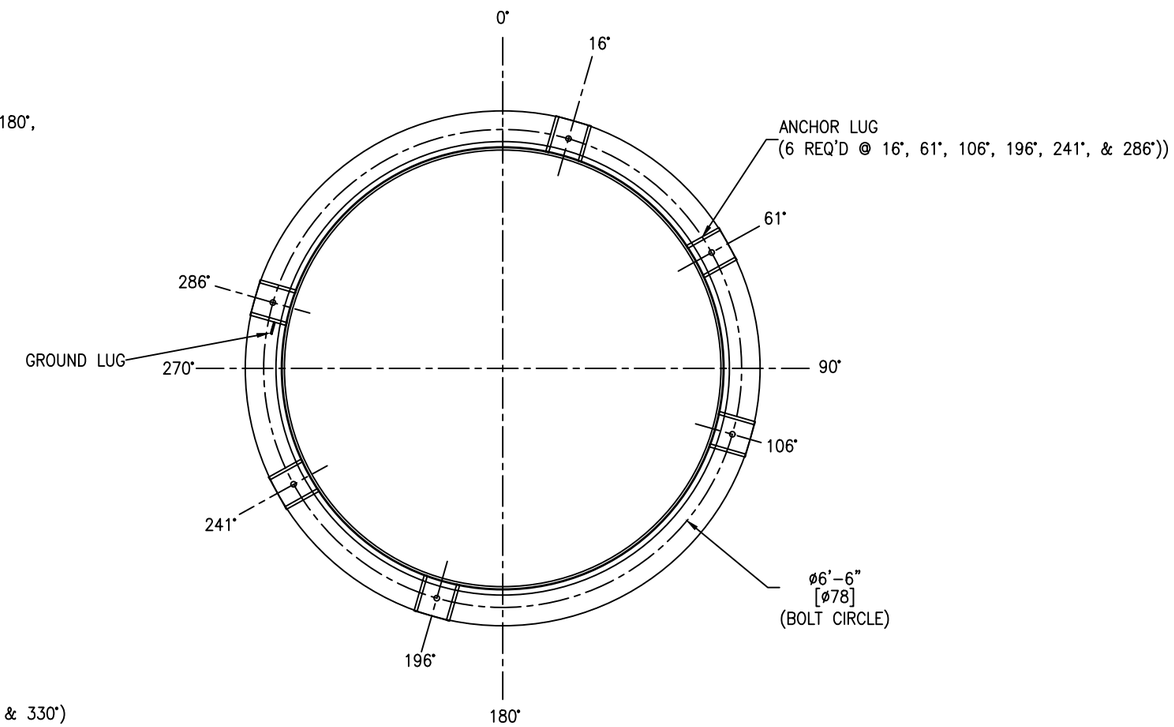

ANCHOR LUG ORIENTATION

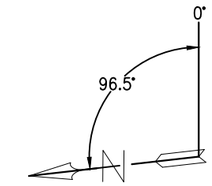

REV	D.BY	C.BY	DATE	DESCRIPTION
				AS BUILT
6	RS	NP	4/21/25	CERTIFIED
5	RS	NP	4/14/25	APPROVAL REV 5
4	RS	NP	4/4/25	APPROVAL REV 4
3	AD	RS	3/18/25	APPROVAL REV 3
2	AD	RS	3/7/25	APPROVAL REV 2
1	AD	RS	2/11/25	APPROVAL REV 1
0	AD	RS	1/24/25	APPROVAL

⚠ REVISIONS

Savannah Tank & Equipment Corp.
1517 Telfair Road, Savannah, GA 31415
(912) 233-8902

DRAWN BY: AD
CHK'D BY: RS
APPROVED BY: NP
SCALE: 3/4" = 1'-0"

THIELE KAOLIN
BLUNGER TANK #3
EQUIP. #
CUST. PO #247729

DRAWING NO.: 003-25-2 SHT 2 OF 10 | REV. SET 6

FC-14

*NOTE SEE HOLE LOCATION IN TOP RING ON SHEET #2.

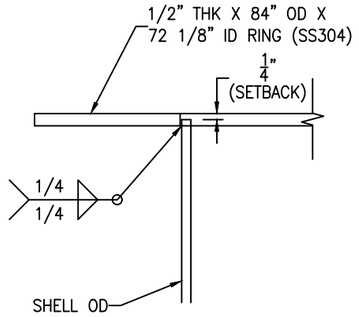

SHELL TOP RING

SCALE: 3" = 1'-0"

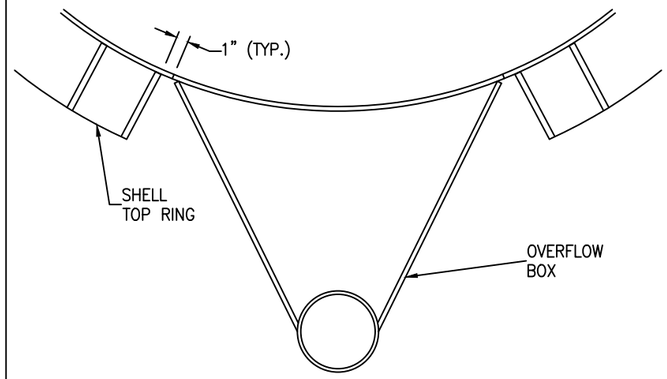

TOP RING CUT-OUT DETAIL

SCALE: 1 1/2" = 1'-0"

FC-39

*NOTE: SEE SQ. TUBE LOCATIONS ON SHEET #2.
*NOTE SEE HOLE LOCATION ON SHEET #2.

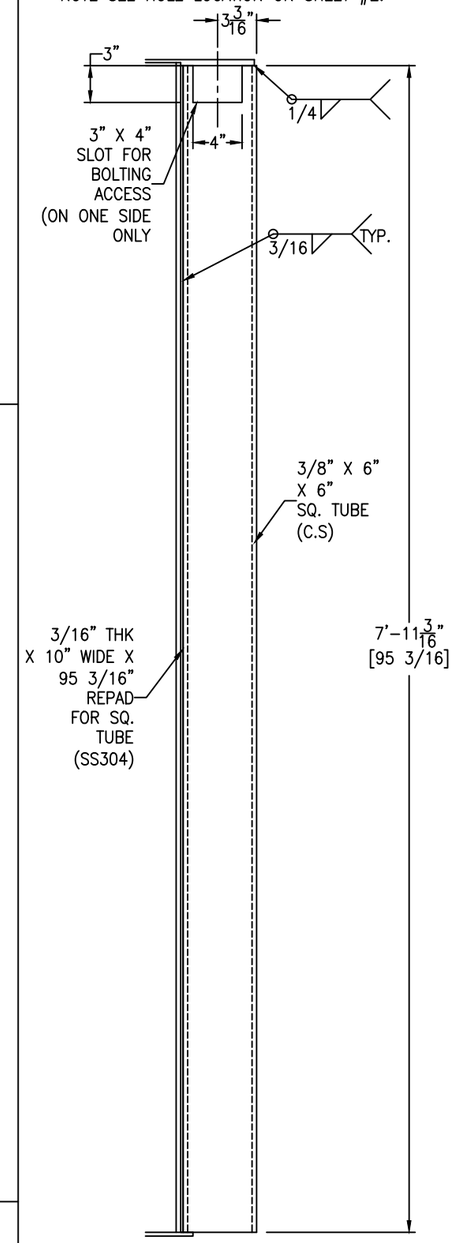

SHELL SQ. TUBE DETAIL

(5 REQ'D) SCALE: 1 1/2" = 1'-0"

FC-14

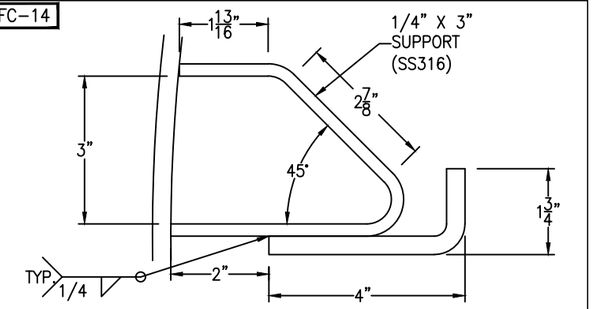

BAFFLE SUPPORT DETAIL

(12 REQ'D) SCALE: 6" = 1'-0"

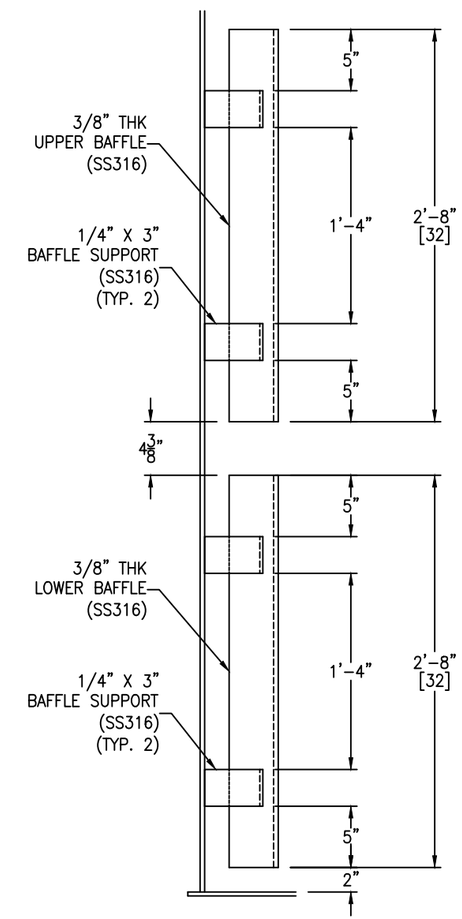

*NOTE: SEE BAFFLE LOCATIONS ON SHEET #2.

BAFFLE DETAIL

(3 REQ'D) SCALE: 1 1/2" = 1'-0"

FC-14

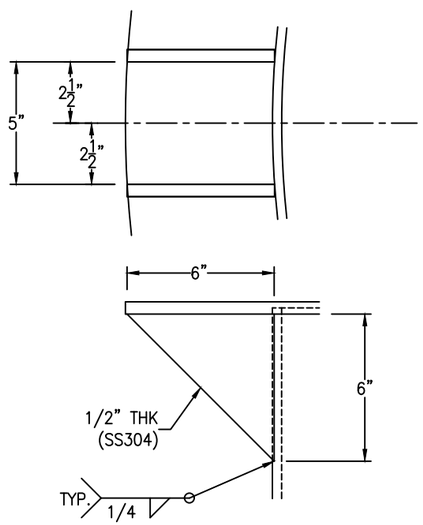

TOP RING GUSSET

(12 REQ'D) SCALE: 3" = 1'-0"

FC-14

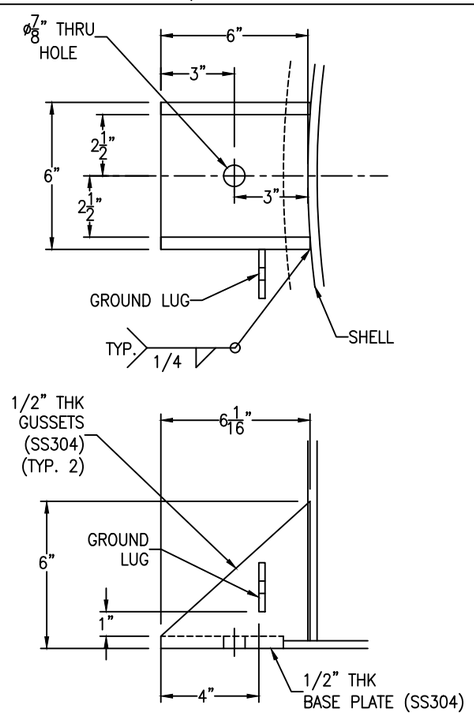

BOTTOM LUG DETAIL

(6 REQ'D) SCALE: 3" = 1'-0"

FC-14

GROUND LUG IS LOCATED @ 286°

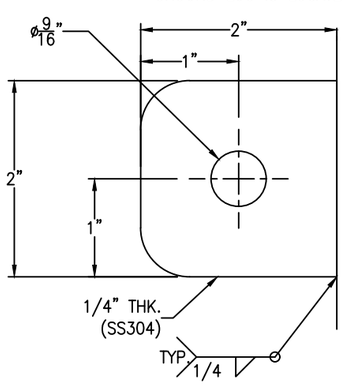

GROUND LUG DETAIL

(1 REQ'D) SCALE: 1'-0" = 1'-0"

FC-14

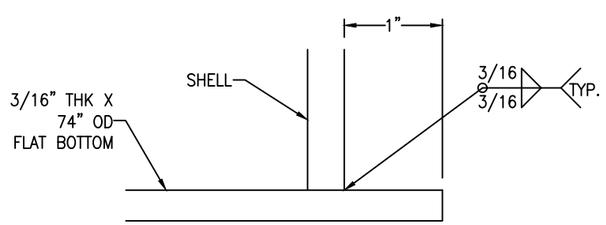

FLAT BOTTOM DETAIL

SCALE: 1'-0" = 1'-0"

REV	D.BY	C.BY	DATE	DESCRIPTION
				AS BUILT
6	RS	NP	4/21/25	CERTIFIED
5	RS	NP	4/14/25	APPROVAL REV 5
4	RS	NP	4/4/25	APPROVAL REV 4
3	AD	RS	3/18/25	APPROVAL REV 3
2	AD	RS	3/7/25	APPROVAL REV 2
1	AD	RS	2/11/25	APPROVAL REV 1
0	AD	RS	1/24/25	APPROVAL

⚠ REVISIONS

Savannah Tank & Equipment Corp.
1517 Telfair Road, Savannah, GA 31415
(912) 233-8902

DRAWN BY: AD
CHK'D BY: RS
APPROVED BY: NP
SCALE: 3/4" = 1'-0"

THIELE KAOLIN
BLUNGER TANK #3
EQUIP. #
CUST. PO #247729

DRAWING NO.: 003-25-3 SHT 3 OF 10 | REV. SET 6

SEE SHEET 5 FOR FRAME DETAILS

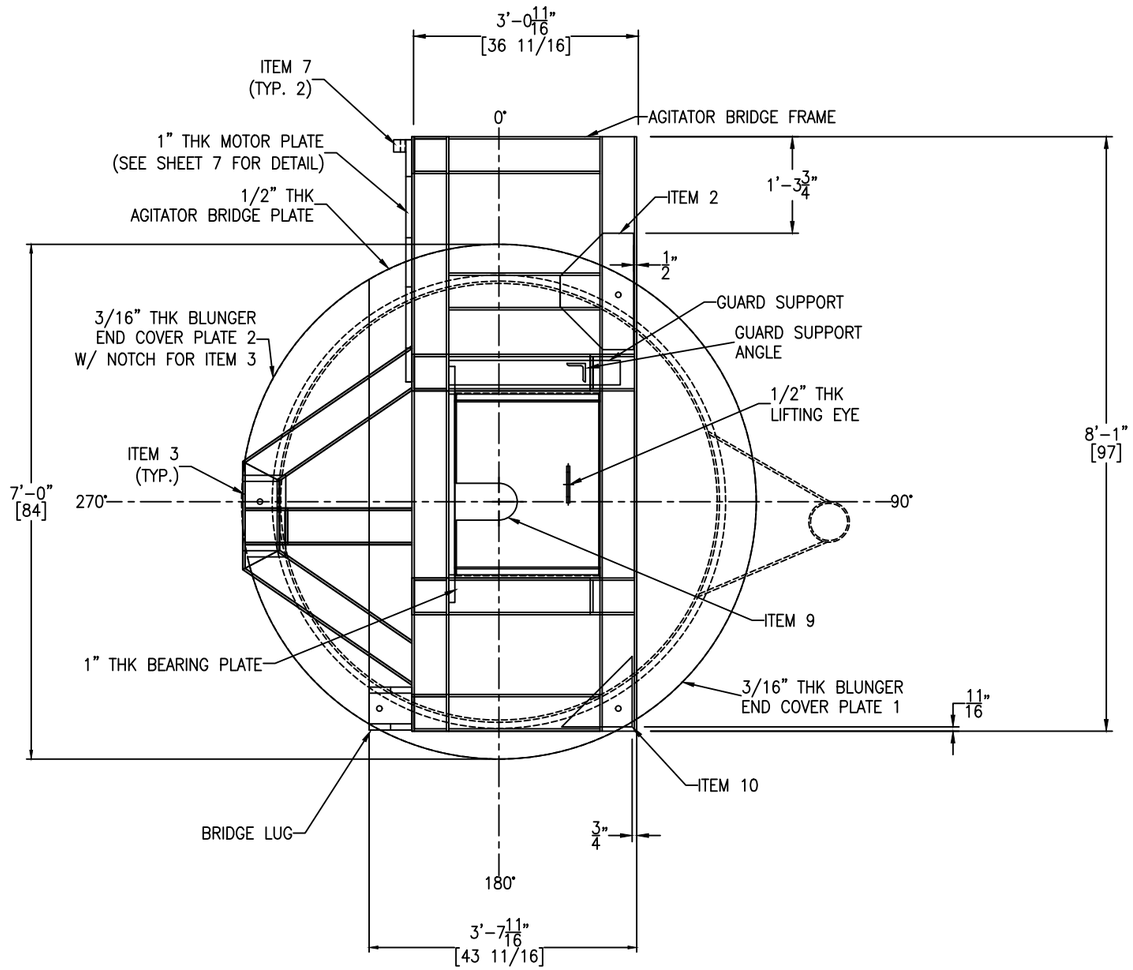

AGITATOR BRIDGE AND FRAME

*AGITATOR BRIDGE IS MADE OF CS

REV	D.BY	C.BY	DATE	DESCRIPTION
				AS BUILT
6	RS	NP	4/21/25	CERTIFIED
5	RS	NP	4/14/25	APPROVAL REV 5
4	RS	NP	4/4/25	APPROVAL REV 4
3	AD	RS	3/18/25	APPROVAL REV 3
2	AD	RS	3/7/25	APPROVAL REV 2
1	AD	RS	2/11/25	APPROVAL REV 1
0	AD	RS	1/24/25	APPROVAL

REVISIONS

Savannah Tank & Equipment Corp.
1517 Telfair Road, Savannah, GA 31415
(912) 233-8902

DRAWN BY: AD
CHK'D BY: RS
APPROVED BY: NP
SCALE: 3/4" = 1'-0"

THIELE KAOLIN
BLUNGER TANK #3
EQUIP. #
CUST. PO #247729

DRAWING NO.: 003-25-4 SHT 4 OF 10 REV. SET 6

FC-38

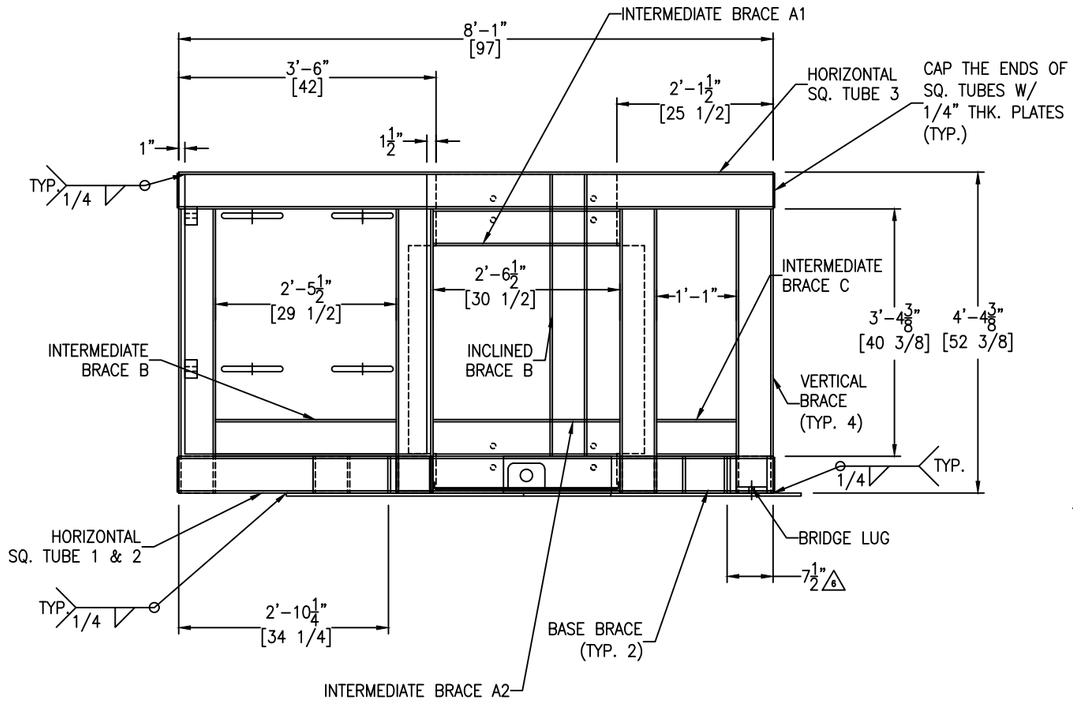

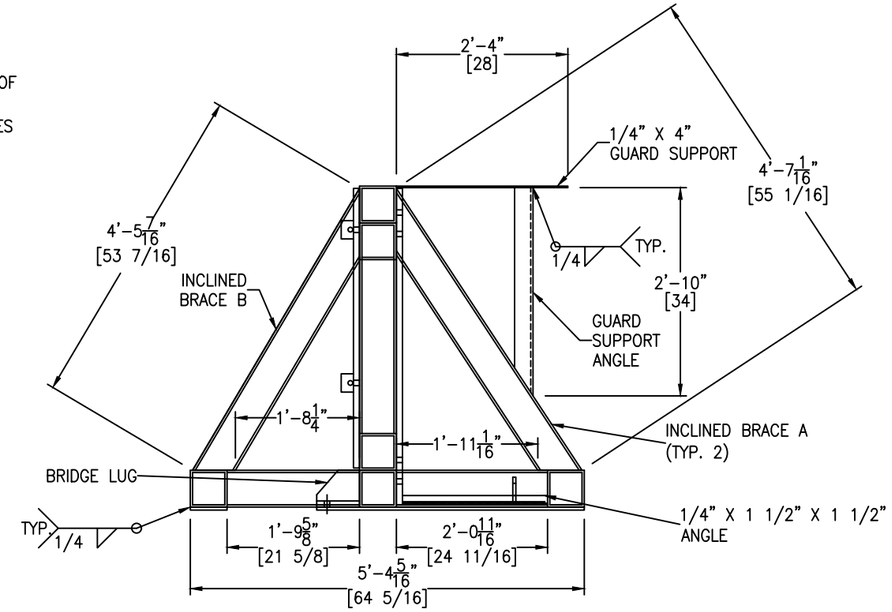

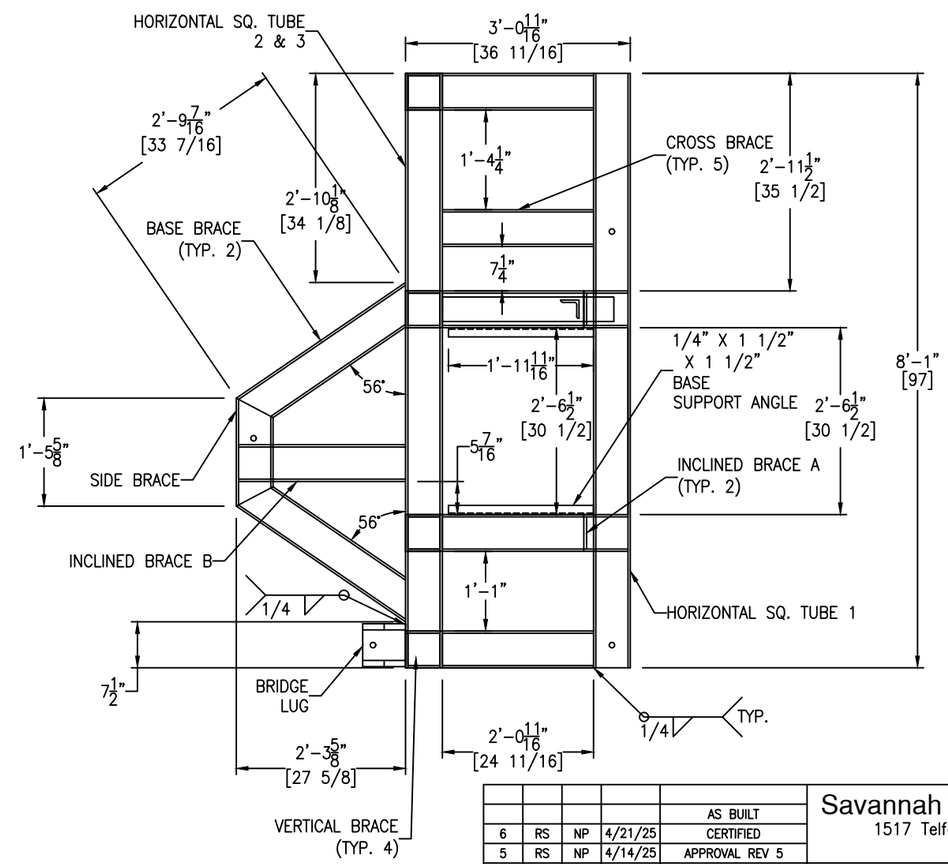

AGITATOR BRIDGE AND FRAME

*AGITATOR BRIDGE IS MADE OF CS

REV	D.BY	C.BY	DATE	DESCRIPTION
				AS BUILT
6	RS	NP	4/21/25	CERTIFIED
5	RS	NP	4/14/25	APPROVAL REV 5
4	RS	NP	4/4/25	APPROVAL REV 4
3	AD	RS	3/18/25	APPROVAL REV 3
2	AD	RS	3/7/25	APPROVAL REV 2
1	AD	RS	2/11/25	APPROVAL REV 1
0	AD	RS	1/24/25	APPROVAL

⚠1 REVISIONS

Savannah Tank & Equipment Corp.
1517 Telfair Road, Savannah, GA 31415
(912) 233-8902

DRAWN BY: AD
CHK'D BY: RS
APPROVED BY: NP
SCALE: 3/4" = 1'-0"

THIELE KAOLIN
BLUNGER TANK #3
EQUIP. #
CUST. PO #247729

DRAWING NO.: 003-25-5 SHT 5 OF 10 | REV. SET 6

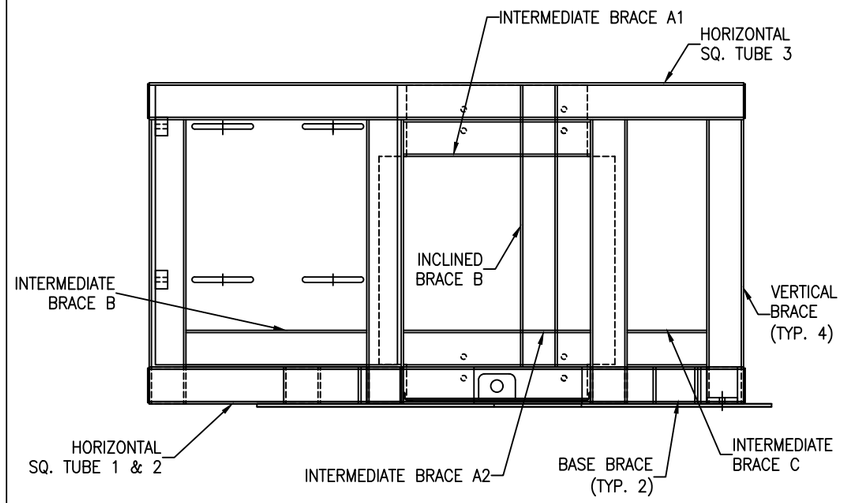

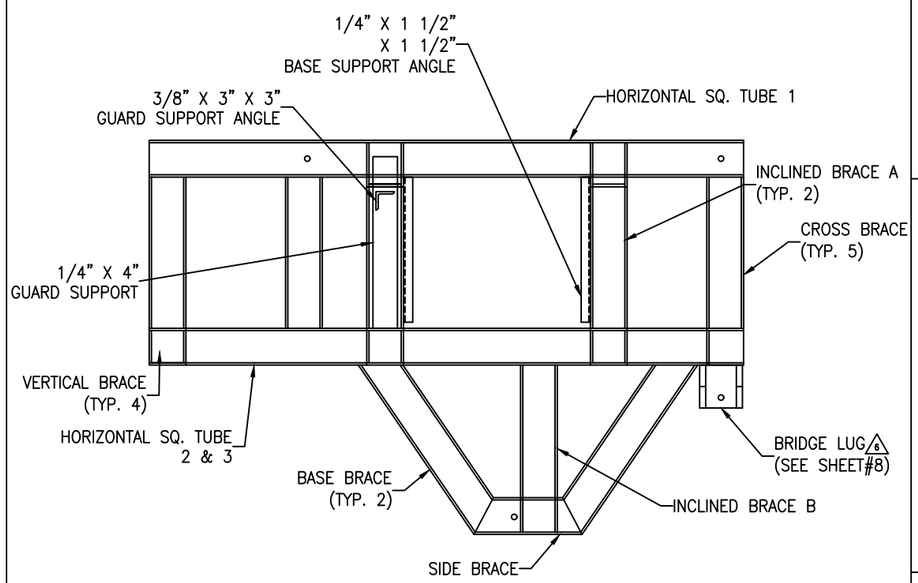

NOTE: ALL SQUARE TUBES AND BRACES ARE
6" X 6" X 3/8" SQ. TUBES
AND ARE MADE OF CS

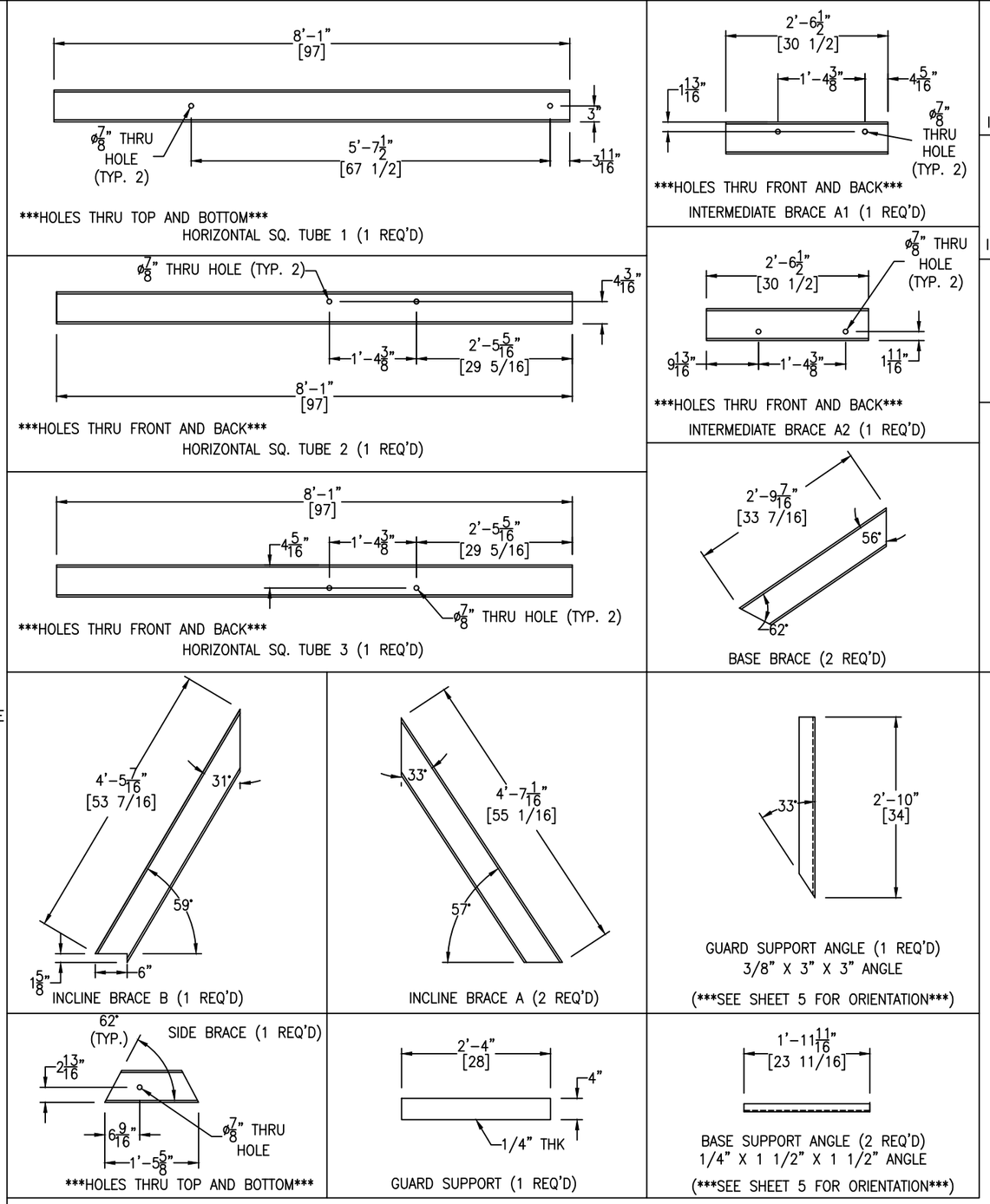

REV	D.BY	C.BY	DATE	DESCRIPTION
				AS BUILT
6	RS	NP	4/21/25	CERTIFIED
5	RS	NP	4/14/25	APPROVAL REV 5
4	RS	NP	4/4/25	APPROVAL REV 4
3	AD	RS	3/18/25	APPROVAL REV 3
2	AD	RS	3/7/25	APPROVAL REV 2
1	AD	RS	2/11/25	APPROVAL REV 1
0	AD	RS	1/24/25	APPROVAL

△1 REVISIONS

Savannah Tank & Equipment Corp.
1517 Telfair Road, Savannah, GA 31415
(912) 233-8902

DRAWN BY: AD
CHK'D BY: RS
APPROVED BY: NP
SCALE: 3/4" = 1'-0"

THIELE KAOLIN
BLUNGER TANK #3
EQUIP. #
CUST. PO #247729

DRAWING NO.: 003-25-6 SHT 6 OF 10 | REV. SET 6

FC-38

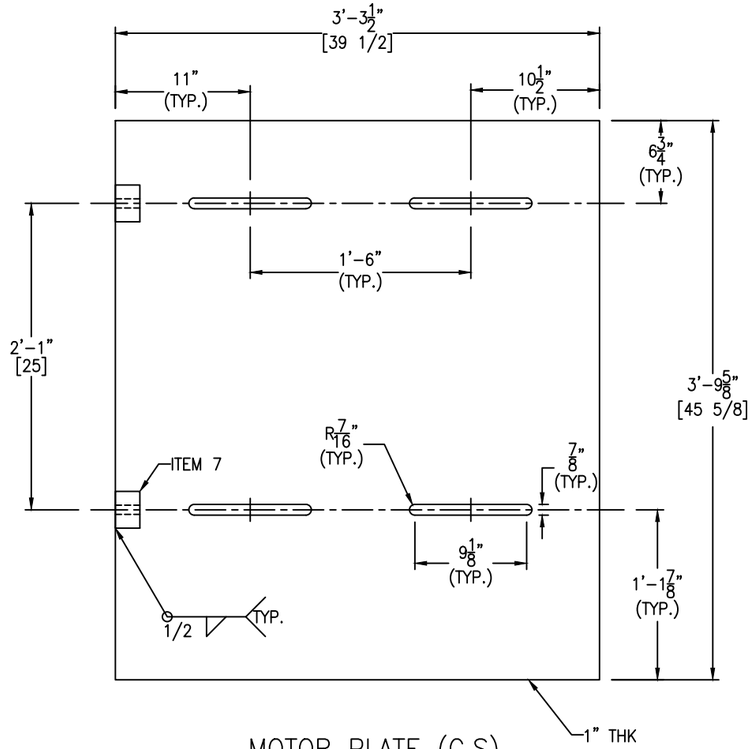

MOTOR PLATE (C.S)

SCALE: 1 1/2" = 1'-0"

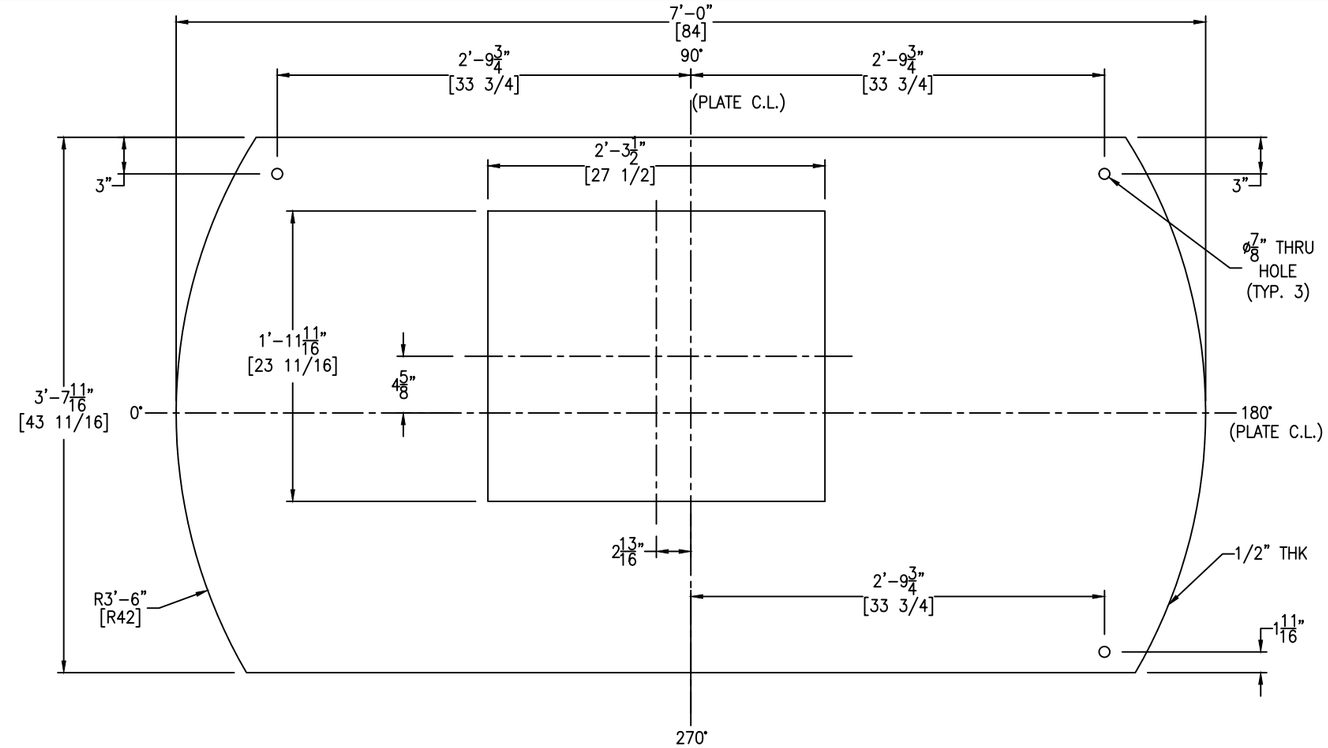

AGITATOR BRIDGE PLATE TO MATCH SHELL TOP RING

AGITATOR BRIDGE PLATE (C.S)

SCALE: 1 1/2" = 1'-0"

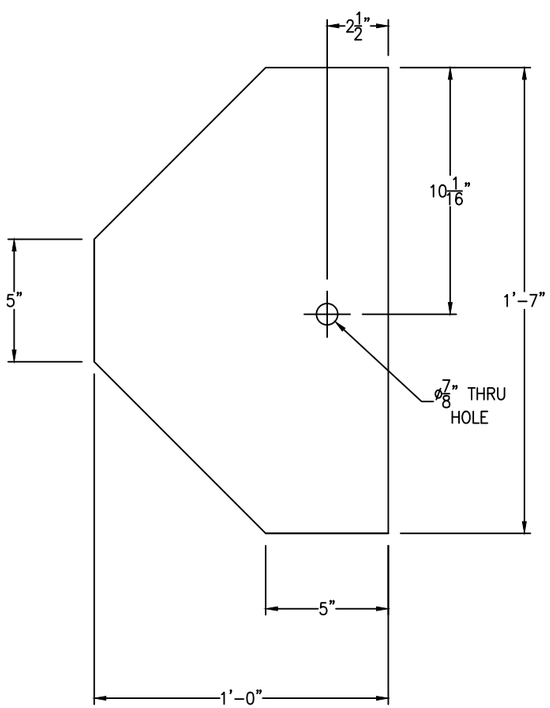

ITEM 2 (C.S)

SCALE: 3" = 1'-0"

FC-38

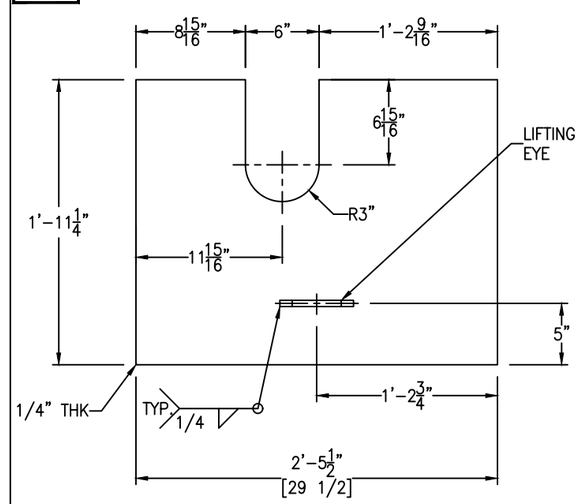

ITEM 9 (C.S)

SCALE: 1 1/2" = 1'-0"

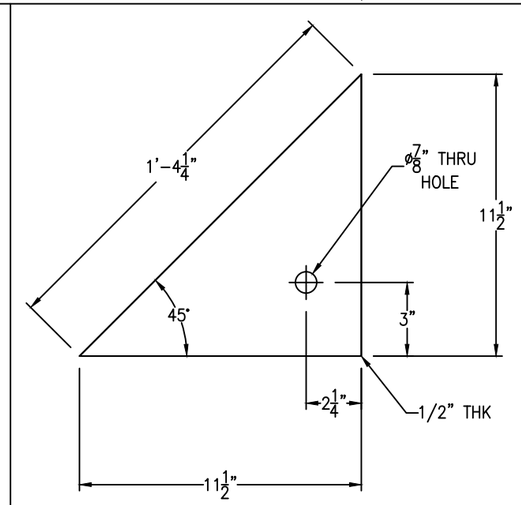

ITEM 10 (C.S)

SCALE: 3" = 1'-0"

FC-38

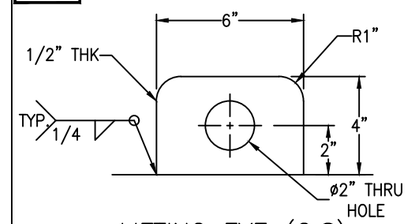

LIFTING EYE (C.S)

SCALE: 3" = 1'-0"

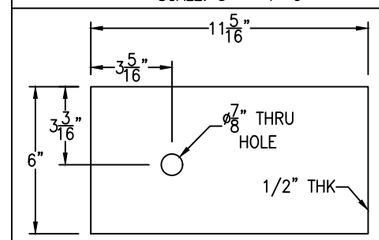

ITEM 3 (C.S)

SCALE: 3" = 1'-0"

REV	D.BY	C.BY	DATE	DESCRIPTION
				AS BUILT
6	RS	NP	4/21/25	CERTIFIED
5	RS	NP	4/14/25	APPROVAL REV 5
4	RS	NP	4/4/25	APPROVAL REV 4
3	AD	RS	3/18/25	APPROVAL REV 3
2	AD	RS	3/7/25	APPROVAL REV 2
1	AD	RS	2/11/25	APPROVAL REV 1
0	AD	RS	1/24/25	APPROVAL

⚠ REVISIONS

Savannah Tank & Equipment Corp.
1517 Telfair Road, Savannah, GA 31415
(912) 233-8902

DRAWN BY: AD
CHK'D BY: RS
APPROVED BY: NP
SCALE: 3/4" = 1'-0"

THIELE KAOLIN
BLUNGER TANK #3
EQUIP. #
CUST. PO #247729

DRAWING NO.: 003-25-7 SHT 7 OF 10 | REV. SET 6

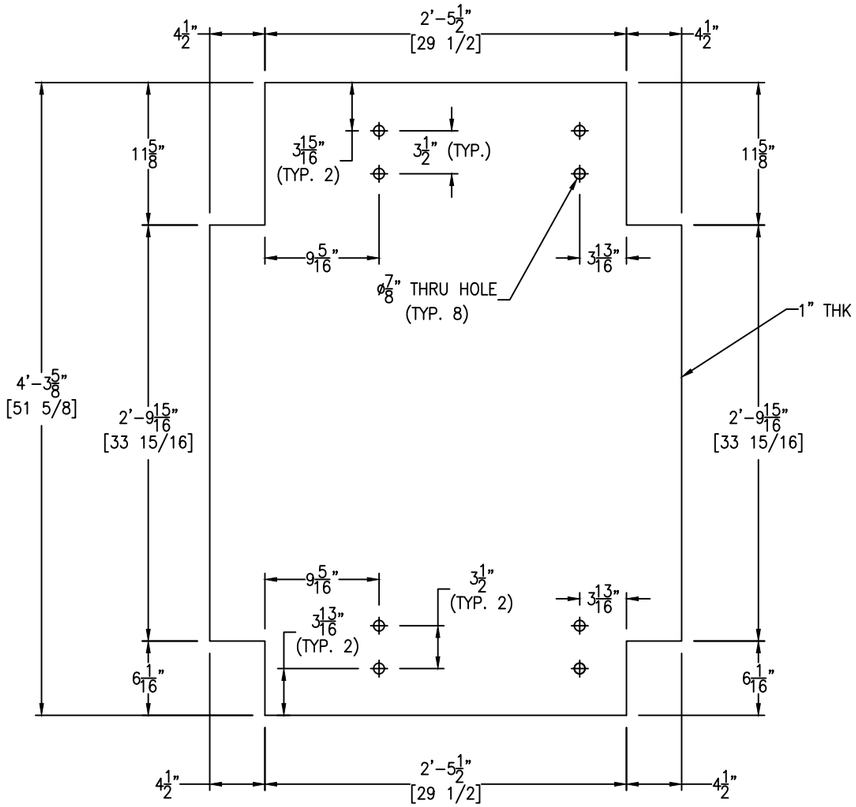

*NOTE: SQUARE TUBES TO WHICH BEARING PLATE IS ATTACHED TO HAVE THROUGH HOLES ON THE SAME LOCATION AS THE BEARING PLATE

BEARING PLATE DETAIL (CS)

SCALE: 1 1/2" = 1'-0"

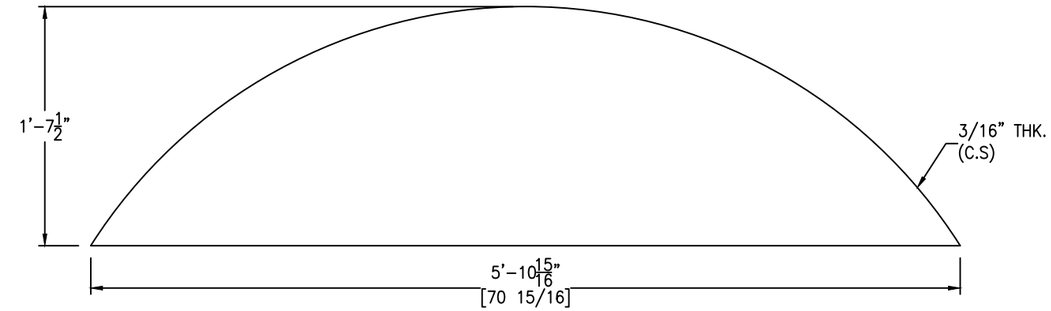

BLUNGER END COVER PLATE 1 (C.S)

(1 REQ'D) SCALE: 1 1/2" = 1'-0"

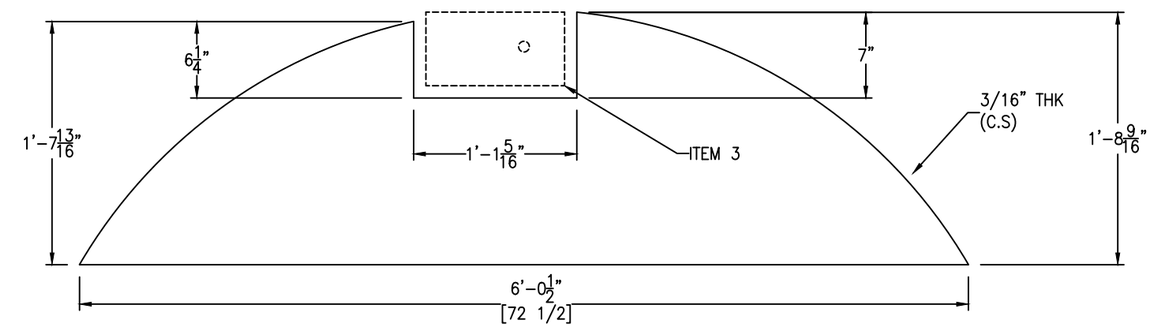

BLUNGER END COVER PLATE 2 (C.S)

(1 REQ'D) SCALE: 1 1/2" = 1'-0"

FC-38

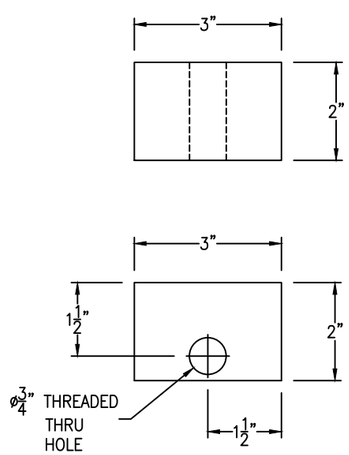

ITEM 7 (C.S)

(2 REQ'D) SCALE: 6" = 1'-0"

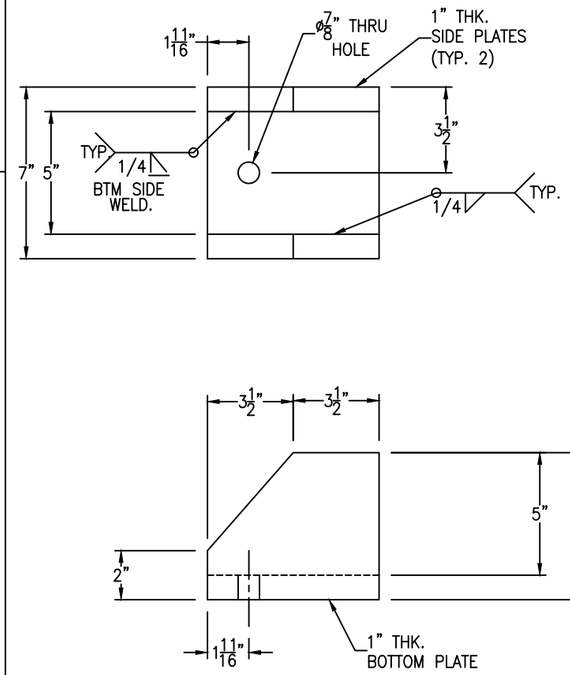

BRIDGE LUG DETAIL (C.S)

SCALE: 3" = 1'-0"

REV	D.BY	C.BY	DATE	DESCRIPTION
				AS BUILT
6	RS	NP	4/21/25	CERTIFIED
5	RS	NP	4/14/25	APPROVAL REV 5
4	RS	NP	4/4/25	APPROVAL REV 4
3	AD	RS	3/18/25	APPROVAL REV 3
2	AD	RS	3/7/25	APPROVAL REV 2
1	AD	RS	2/11/25	APPROVAL REV 1
0	AD	RS	1/24/25	APPROVAL

△ REVISIONS

Savannah Tank & Equipment Corp.
1517 Telfair Road, Savannah, GA 31415
(912) 233-8902

DRAWN BY: AD
CHK'D BY: RS
APPROVED BY: NP
SCALE: 3/4" = 1'-0"

THIELE KAOLIN
BLUNGER TANK #3
EQUIP. #
CUST. PO #247729

DRAWING NO.: 003-25-8 SHT 8 OF 10 | REV. SET 6

FC-14

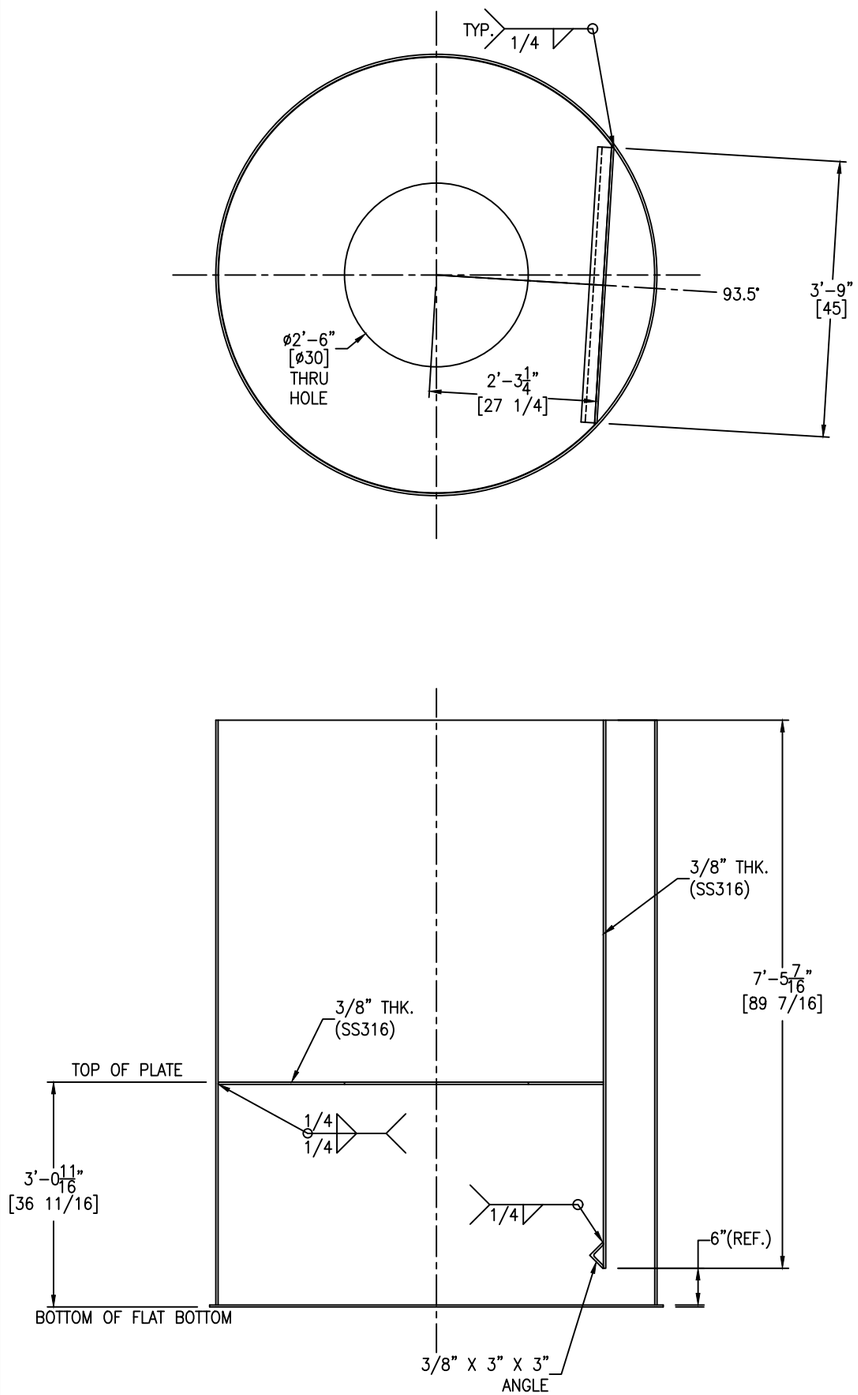

DIVIDER PLATE DETAIL

SCALE: 3/4" = 1'-0"

FC-14

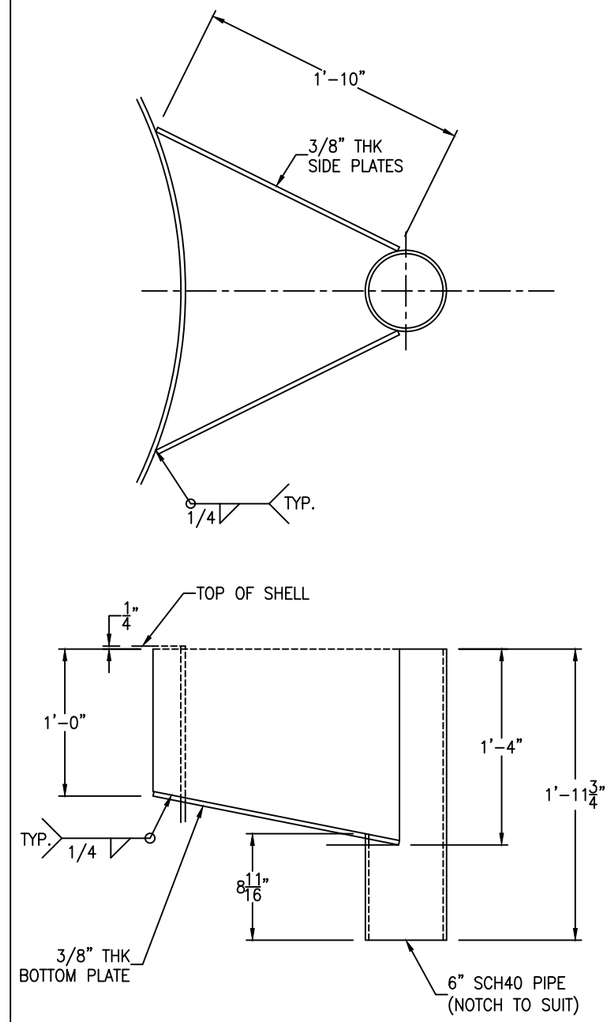

OVERFLOW BOX IS MADE OF SS316

OVERFLOW BOX DETAIL

SCALE: 1 1/2" = 1'-0"

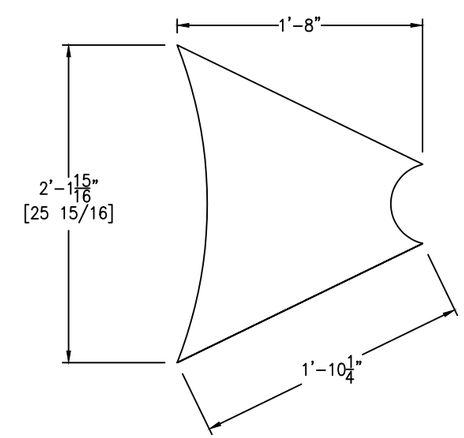

OVERFLOW BOX BOTTOM PLATE DETAIL

SCALE: 1 1/2" = 1'-0"

REV	D.BY	C.BY	DATE	DESCRIPTION
				AS BUILT
6	RS	NP	4/21/25	CERTIFIED
5	RS	NP	4/14/25	APPROVAL REV 5
4	RS	NP	4/4/25	APPROVAL REV 4
3	AD	RS	3/18/25	APPROVAL REV 3
2	AD	RS	3/7/25	APPROVAL REV 2
1	AD	RS	2/11/25	APPROVAL REV 1
0	AD	RS	1/24/25	APPROVAL

⚠1 REVISIONS

Savannah Tank & Equipment Corp.
1517 Telfair Road, Savannah, GA 31415
(912) 233-8902

DRAWN BY: AD
CHK'D BY: RS
APPROVED BY: NP
SCALE: 3/4" = 1'-0"

THIELE KAOLIN
BLUNGER TANK #3
EQUIP. #
CUST. PO #247729

DRAWING NO.: 003-25-9 SHT 9 OF 10 REV. SET 6

FC-14

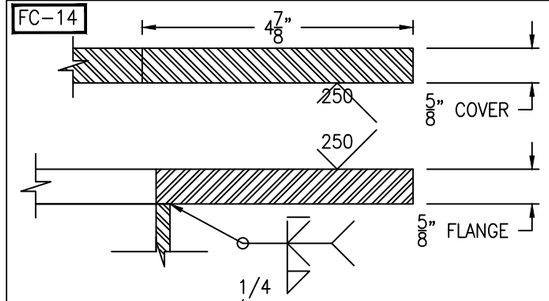

FLANGE/COVER DETAIL

(1+1 REQ'D) SCALE: 6" = 1'-0"

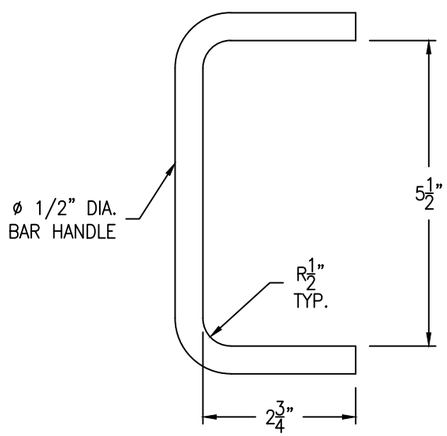

HANDLE DETAIL

(2+2 REQ'D) SCALE: 6" = 1'-0"

FC-14

Bolting for blind
(28+28) 3/4-10 NC x 2 1/2" HH BOLT
(28+28) 3/4-10 NC HH NUT
(1+1) 25 3/8" OD x 20" ID x 1/8" GASKET

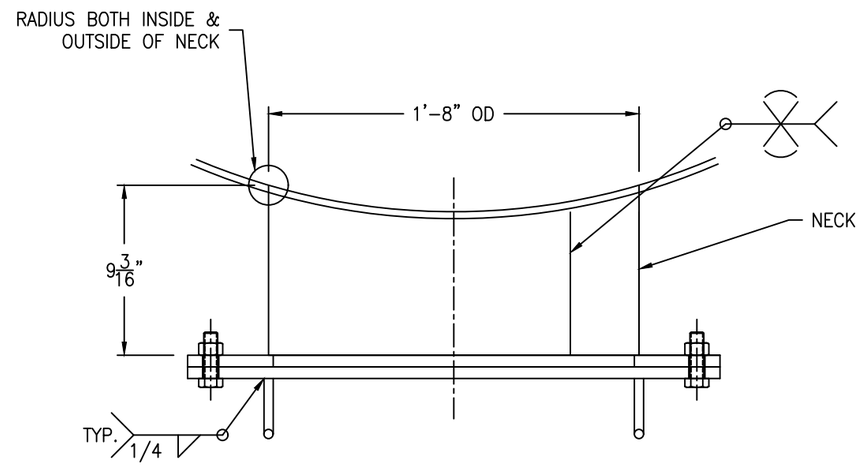

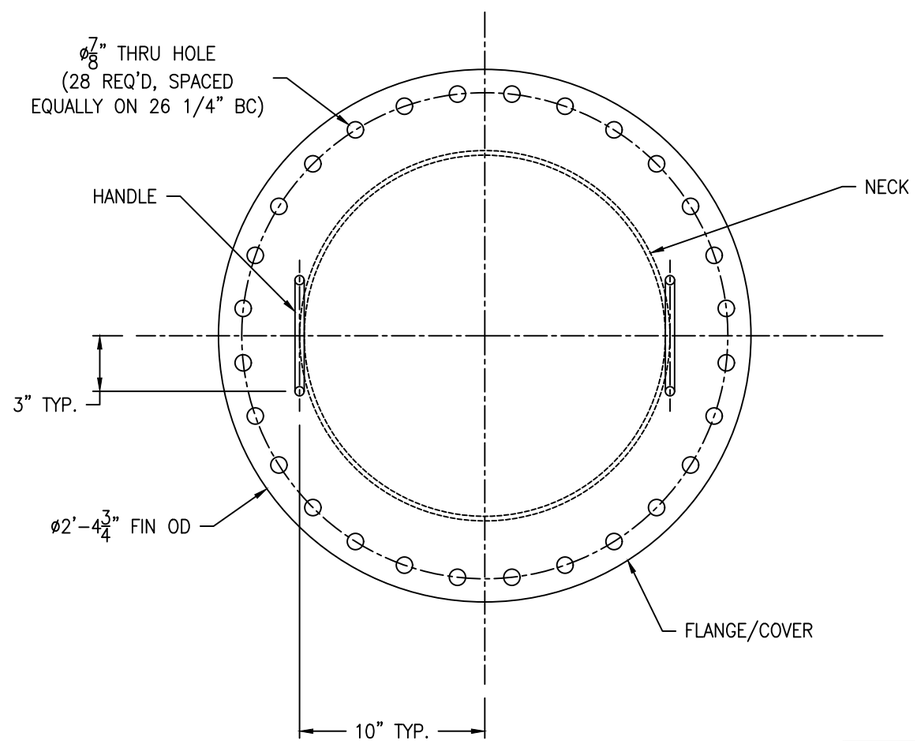

MANWAY A1 & A2 DETAIL

(2 REQ'D) SCALE: 2" = 1'-0"

FC-14

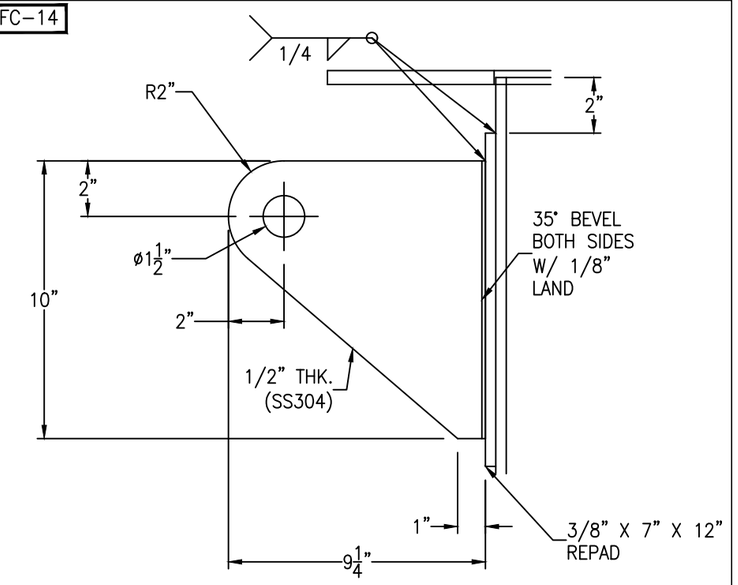

LIFT LUG DETAIL

(2 REQ'D) SCALE: 8" = 1'-0"

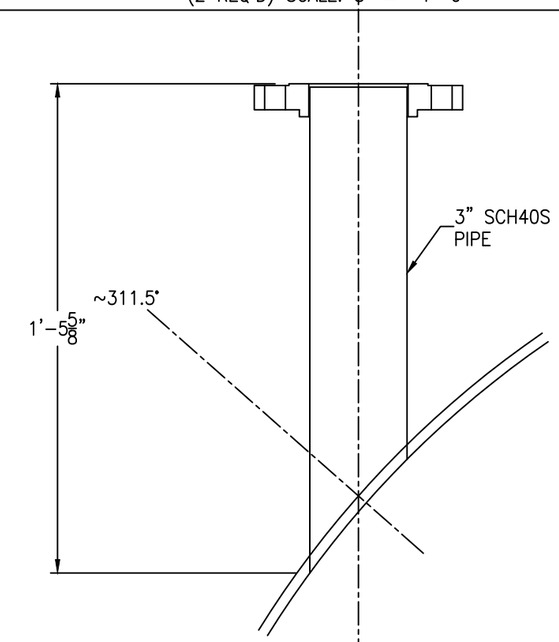

NOZZLE B DETAIL

SCALE: 8" = 1'-0"

REV	D.BY	C.BY	DATE	DESCRIPTION
				AS BUILT
6	RS	NP	4/21/25	CERTIFIED
5	RS	NP	4/14/25	APPROVAL REV 5
4	RS	NP	4/4/25	APPROVAL REV 4
3	AD	RS	3/18/25	APPROVAL REV 3
2	AD	RS	3/7/25	APPROVAL REV 2
1	AD	RS	2/11/25	APPROVAL REV 1
0	AD	RS	1/24/25	APPROVAL

⚠1 REVISIONS

Savannah Tank & Equipment Corp.
1517 Telfair Road, Savannah, GA 31415
(912) 233-8902

DRAWN BY: AD
CHK'D BY: RS
APPROVED BY: NP
SCALE: 2" = 1'-0"

THIELE KAOLIN
BLUNGER TANK #3
EQUIP. #
CUST. PO #247729

DRAWING NO.: 003-25-10 SHT 10 OF 10 | REV. SET 6